Rev	AWO #	Description	Date	Appr
-		RELEASED	2/8/06	

APPROVED: _____

DATE: _____ TITLE: _____

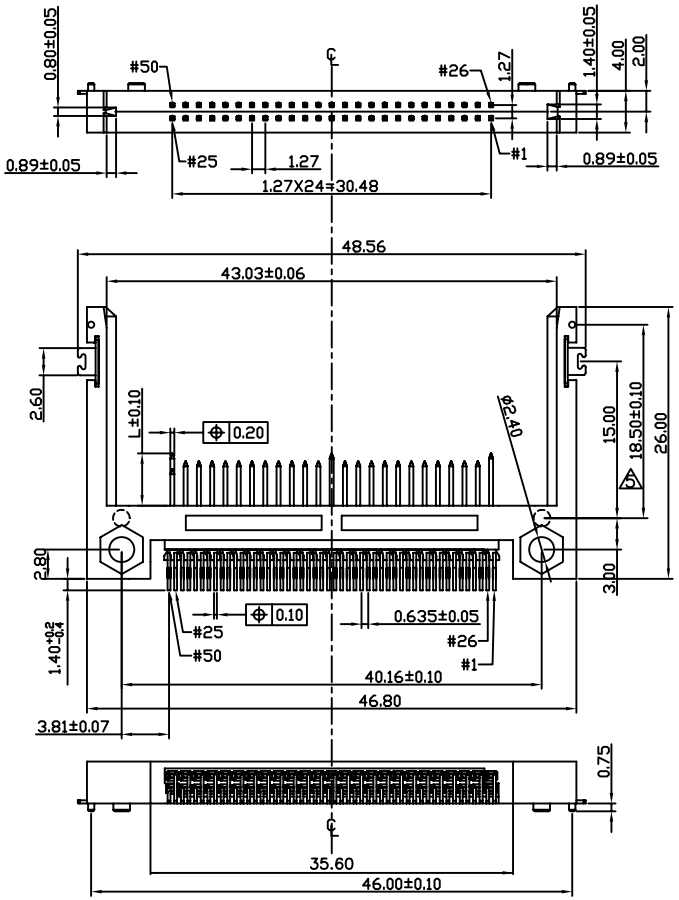

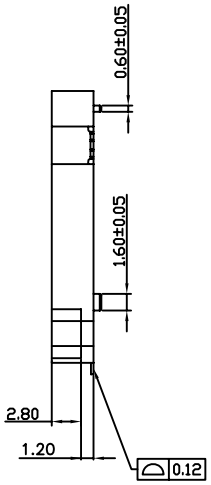

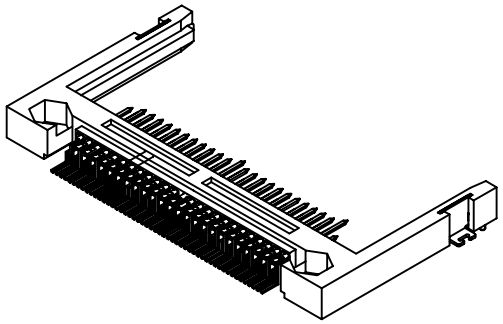

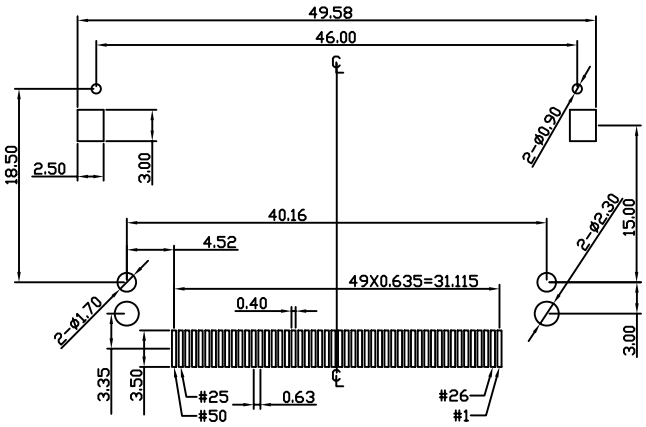

RECOMMENDED P.C.B. LAYOUT
TOLERANCES: ±0.05mm

SPECIFICATIONS:
Material:
Insulator: LCP, glass reinforced, rated UL 94V-0
Insulator color: Beige
Contacts: Brass
Plating:
3u" Gold over Nickel underplate on contact area, Tin over Copper underplate on SMT tails
Electrical:
Operating voltage: 100 VAC max
Current rating: 0.5 Amps max
Contact resistance: 40 mohms
Insulation resistance: 1000 Mohms min
Dielectric withstanding voltage: 500 VAC for 1 minute
Temperature Rating:
Operating temperature: -20°C to +90°C
Environmental:
Lead free, RoHS compliant.
Recommended soldering temp: 260°C for 5 sec.

RoHS COMPLIANT

POWER	5.00mm	1,13,38,50
GENERAL	4.25mm	all other pins
DETECT	3.50mm	25,26
Pin type	Interface Dim. L	Pin No.

UNLESS OTHERWISE SPECIFIED
ALL DIMENSIONS ARE INCHES [MM]
TOLERANCES: EXCEPT AS NOTED

INCHES		HOLES	
.X	± .10	Ø.X	±.10
.XX	± .020	Ø.XX	±.015
.XXX	± .015	Ø.XXX	±.010

APPROVALS		DATE
DRAWN	SS	2/8/06
CHECKED		
APPROVED		

ADAM TECH
909 Rahway Avenue, Union, NJ 07083
Phone: 908-687-5000 Fax: 908-687-5710

TITLE: CF SOCKET, SLIM TYPE, TOP MOUNT

SIZE	PART NO.	REV.
X	CFA-50-A-SG-1	-

REF: | SCALE: NTS | SHEET 1 OF 1